Medtronic

URGENT FIELD SAFETY NOTICE

Abre™ Venous Self-Expanding Stent System Partial Stent Deployment Workaround

Notification

Product Name	Model Numbers	Lot Identification
Abre™ Venous Self-Expanding Stent System	All Models	All Lots

October 2026

Medtronic Reference: FA00007

EU Manufacturer Single Registration Number (SRN): US-MF-000019977

Dear Health Care Professional,

Medtronic is writing to inform you of an update to the Instructions for Use (IFU) for the Abre™ Venous Self-Expanding Stent System (herein referred to as Abre). This update provides a validated manual deployment workaround method to help mitigate potential harms in the rare event you experience a partial stent deployment.

Background

Until 14-Sep-2026, Medtronic has received reports of thirty-one (31) reported occurrences of partial stent deployments (0.015% occurrence rate). While the rate of occurrence has increased recently, it continues to be below the rate predicted in product risk management documentation. Twenty-seven (27) events resulted in no or negligible patient harm. One (1) event resulted in a secondary endovascular procedure, two (2) events resulted in surgical conversion, and one (1) event resulted in prolonged medical therapy and chronic pain. Other potential harms associated with partial stent deployment include embolism, occlusion/ischemia, vessel perforation, rupture, and blood loss, although these harms have not been observed. There were no patient deaths associated with this issue and no life-threatening events. The probability of these serious adverse health consequences is considered remote.

In 18 of the 31 partial deployment occurrences, a deployment workaround that is not documented in the IFU was utilized, involving disassembly of the handle. Utilization of the deployment workaround has shown a significant improvement in patient outcomes.

Mitigation

Medtronic has completed validation testing to standardize the deployment workaround method; the method is included in this letter and the Abre IFU will be updated to reflect this standardized approach, pending regulatory

approvals. **These instructions should only be followed in the event a *partial* stent deployment occurs**. Medtronic is taking this action to reduce the severity of potential patient harms. The steps provided below are intended to minimize the risk of serious adverse health consequences in the rare event of partial stent deployment.

Customer Actions Required:

Medtronic records indicate that your facility has received one or more Abre units. As a result, Medtronic requests that you immediately take the following actions:

1. Review the upcoming updates to the IFU in this letter.
2. Share this notice with all those who need to be aware within your organization or to any organization where the products have been transferred.
3. Complete the enclosed Customer Acknowledgement Form after sharing with physician users and email to your local Medtronic Field Representative at **rs.fsnuki@medtronic.com .**

A video demonstration of the Deployment Workaround Method can be viewed at medtronic.com/abredeploymentworkaround.

Abre Deployment Workaround Method:

Note: *In the unlikely event a stent fails to deploy or fails to start to deploy, the device should be removed and disassembly should not be attempted.*

In the unlikely event of a delivery system failure, where the stent is ***partially deployed*** *and the thumbwheel is unable to rotate or rotates freely, the following steps may be used to successfully deploy the stent:*

1. *Ensure the safety locking pin is completely removed from the delivery system and there is no slack in the system.*
2. *Separate the blue strain relief from the handle using an 11-blade scalpel; cut on the top and bottom of the handle, from the white tabs toward the handle. See Figure X for the blue strain relief cut locations.*

Note: *Do not cut beyond the white tabs. Cutting beyond the white tabs may cut into and damage the catheter.*

Caution: *Monitor stent position whenever manipulating the handle to help prevent stent malposition.*

Figure X. *Blue strain relief cut locations*

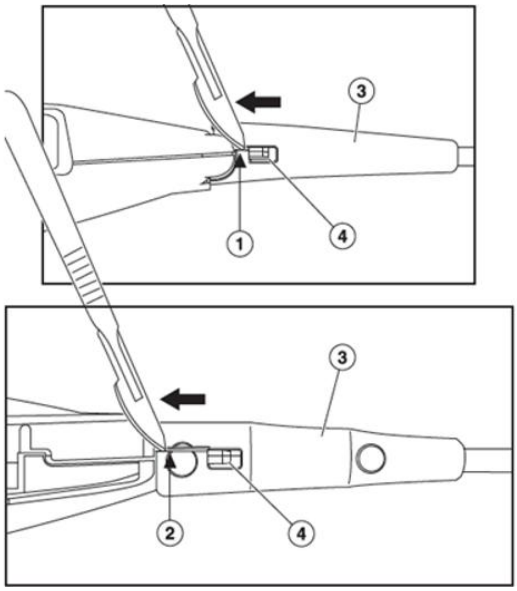

1 Top cut line (top of device)

2 Bottom cut line (bottom of device)

3 Blue strain relief

4 White tabs

3. *Slide the strain relief and the blue isolation sheath down the catheter and away from the handle.*

Caution: *Failure to hold the delivery system in a fixed position may cause the stent to foreshorten or lengthen or become malpositioned.*

4. *Locate the seam that runs along the length of the handle. Open the two halves at the open safety locking pin location*

Caution: *Handle interior pieces could come loose.*

5. *Set aside the two halves of the handle.*
6. *Keep the inner shaft and delivery system stable.*
7. *Pin the tan inner shaft with one hand and use the other hand to grip the silver retractable sheath (not the blue isolation sheath)*
8. *Pull back the silver retractable sheath until the stent is fully deployed*

Note: *If excessive force is required, stop this workaround.*

Medtronic

9. *Once the stent is fully deployed, remove the delivery system from the patient.*

No actions are required for patients that have previously received an Abre device. There are no product retrievals or disposals requested by Medtronic and product can continue to be used in accordance with the above instructions.

Medtronic will notify all applicable regulatory agencies about this matter. This letter serves as a notification for your records regarding the upcoming updates to the Abre IFU; no further actions are needed.

We are committed to patient safety and appreciate your prompt attention to this matter. If you have any questions regarding this issue or communication, please contact your Medtronic Field Representative.

Sincerely,

Maria Artamonova



Associate Regulatory Affairs Specialist – UK and Ireland

Enclosed:

Appendix A. List of Impacted Model Numbers and UDIs

Customer Acknowledgement form

Medtronic

Appendix A. List of Impacted Model Numbers and UDIs

UDI / GTIN	Model Number
763000547196	AB9G10040090
763000547202	AB9G10060090
763000547219	AB9G10080090
763000547226	AB9G10100090
763000547233	AB9G10120090
763000547240	AB9G10150090
763000547257	AB9G12060090
763000547264	AB9G12080090
763000547271	AB9G12100090
763000547288	AB9G12120090
763000547295	AB9G12150090
763000547301	AB9G14060090
763000547318	AB9G14080090
763000547325	AB9G14100090
763000547332	AB9G14120090
763000547349	AB9G14150090
763000547356	AB9G16060090
763000547363	AB9G16080090
763000547370	AB9G16100090
763000547387	AB9G16120090
763000547394	AB9G16150090
763000547400	AB9G18060090
763000547417	AB9G18080090
763000547424	AB9G18100090
763000547431	AB9G18120090
763000547448	AB9G18150090
763000547455	AB9G20060090
763000547462	AB9G20080090
763000547479	AB9G20100090
763000547486	AB9G20120090
763000547493	AB9G20150090

Medtronic

FA00007 Customer Acknowledgement Form - Response is required Abre™ Venous Self-Expanding Stent System Partial Stent Deployment Workaround

Please complete this Form in its entirety.

Date: _____

Name of Person Completing this Form: _____

Title:_____

Direct Phone #:_____

Email:_____

Account Name:_____

Account Number:_____

Account Address:_____

City: _____Post Code:_____

Country:_____

I have read and understand the instructions provided and acknowledge receipt of the **notification** regarding the use of the **Abre™ Venous Self-Expanding Stent System** by signing below. I also agree to further distribute and communicate this important information within my facility and to anyone whom I have further distributed **Abre™ Venous Self-Expanding Stent System** as required.

_____ _____ _____

Name: (print) Signature: Date:

If you have any questions regarding this notification, please contact your Medtronic sales representative.

PLEASE EMAIL OR FAX THIS ACKNOWLEDGEMENT TO: rs.fsnuki@medtronic.com .